IS0091
Rev. H ecn 10125 5/2015

Depth Sounder
Owner's Manual

- Digital Depth Sounder displays depth in feet and meters
- Shallow and Deep Water alarms
- Alarms are Audio and Visual
- Programmable Keel Offset

Made in the USA

Faria Beede Instruments, inc.
www.FariaBeede.com

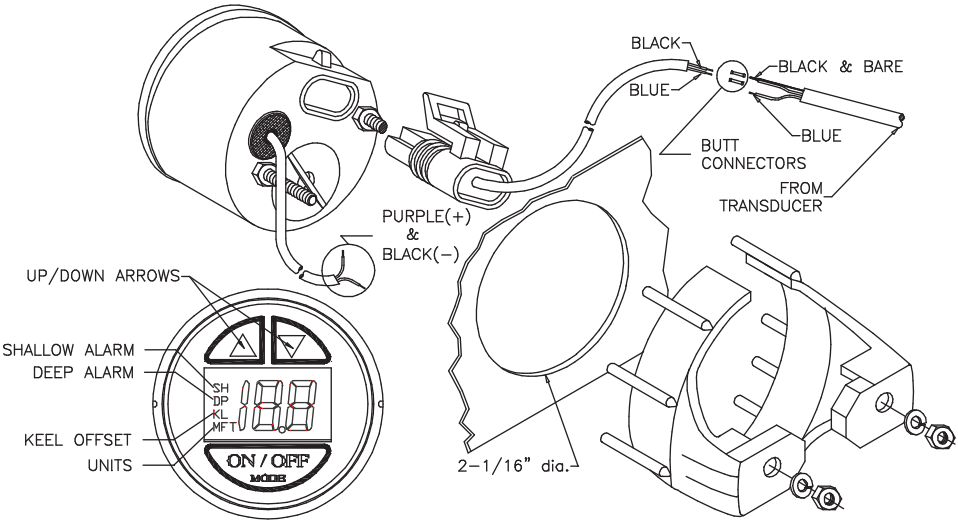

WARNING

The depth sounder is not to be used for navigation or as a device to avoid grounding which may result in boat damage or personal injury. Always use caution operating in shallow areas and maintain a very slow speed. Be aware that depths may change too quickly for you to react and avoid grounding.

CAUTION

Disconnect the battery during installation. Tighten nuts on the back-clamp only slightly more than you can tighten with your fingers. Six inch-pounds of torque are sufficient. Over-tightening could result in damage to the instrument and may void your warranty.

Installation

1. It is recommended that insulated wire terminals, preferably ring type, be used on all connections to the power source.

2. Cut a 2-1/16" diameter hole in the dash and mount the gauge with the back clamp supplied.

3. Connect any one of the black wires to the boat's electrical ground, usually available at several locations near the instrument panel.

4. Connect the purple wire to a 12 Volt DC circuit that is activated by the ignition switch.

5. Once the transducer is installed and you have lead the cable to the depth sounder, connect the three wires (black, blue, and bare) from the transducer to the corresponding colored wires of the connector plug using the butt connectors supplied. (See Illustration)

Note:

1) The bare and black wire from the transducer will need to be twisted together and then both connected to the black wire of the plug.

The butt connectors have a heat activated waterproofing. When the butt connections have been crimped, slowly apply heat with a heat gun until you see sealant coming out of the connector ends. It is recommended to wrap the connections together with electrical tape for further protection. Plug the connector into the rear of the depth sounder.

2) If the transducer cable is not connected properly or not plugged into the depth sounder, or the boat in the water, the display will blink when the power is applied to the unit.

General description:

The depth sounder will display depth of 3-199 ft, 1-92 m, or 1-54 F. To allow greater

depths to be displayed in the “ft” (Feet) mode the depth sounder will automatically change to “F” (Fathoms) mode and continue to display depths to approximately 54 fathoms.

When the depth decreases below 200 feet the display will return to the “ft” mode. Extreme depths may be limited by type of transducers utilized or bottom conditions. If the reading is less than 19.9 feet, meters or fathoms, 1/10th increments will be displayed.

If the reading is more than 19.9 feet, all readings will be in whole numbers.

The depth sounder has an audible and LCD displayed depth alarm with adjustable shallow and deep limits and a depth below keel offset feature. These settings once made are stored in memory and will remain even if the battery is disconnected.

Operation:

Power on

The depth sounder will activate automatically when the power to it is initially turned on. You do not have to press the combination “ON / OFF MODE” keypad.

The LCD will illuminate showing the depth and will also show the type of units selected, feet (FT), meters (M), or fathoms (F).

To turn the depth sounder off, press and hold the “ON / OFF MODE” keypad for 4 seconds. Pressing the “ON / OFF MODE” keypad again will reactivate the unit.

Note:

The instrument is designed to have the internal LED lighting remain on as long as power is supplied even if the unit is turned “off” at the keypad.

Depth alarm

Shallow mode:

Pressing the “ON / OFF MODE” keypad again displays the “SH” shallow depth alarm setting. This is the shallowest water that will activate the alarm. Press and hold the up or down arrow keypads to adjust the reading to the desired depth.

Deep mode:

Pressing the “ON / OFF MODE” keypad again displays the “DP” deep depth alarm setting. This is the deepest water that will activate the alarm. Press and hold the “Up” or ‘Down” arrow keypads to adjust the reading to the desired depth.

When the shallow depth setting is read by the depth sounder, the “SH” will flash on the LCD and the audible alarm will sound rapidly. When the deep depth setting is read by the depth sounder, the “DP” will flash on the LCD and the audible alarm will sound at 2 beeps per second.

Note:

To fully deactivate an alarm, reset it to zero. Pressing the “ON / OFF MODE” keypad temporarily deactivates the alarm. To reactivate the alarm press the “ON / OFF MODE” keypad until the depth reading appears.

Keel offset

Pressing the “ON / OFF MODE” keypad again displays the “KL” keel offset setting. This can be set so that the depth sounder either shows the depth below the keel or the depth below the transducer.

Press the up or down arrow keypads to adjust the reading to set so that the depth sounder either shows the depth below the keel or the depth below the transducer.

Press the up or down arrow keypads to adjust the reading to the desired depth no more than 19.9 ft. For example if the bottom of the keel is 2 feet below the transducer and you want the depth sounder to read the depth below the keel, the display should be adjusted to read 2.0 FT.

Note:

Once a keel offset is programmed, the depth below the keel will activate the shallow and deep alarms.

Units

Pressing the “ON / OFF MODE” keypad again displays “Un” on the LCD indicating the units mode.

Press either the up or down arrow keypads to set the units desired to feet (FT), meters (M), or fathoms (F). These units once set, will remain the same for all modes. Pressing the “ON / OFF MODE” keypad again returns the depth sounder to normal operation.

Wiring Instructions For Remotely Switched Faria Beede Depth Sounders Only

Wire Color	Function
BLACK	GROUND (-)
PURPLE	KEY ON POWER (+)
BLUE	MODE SWITCH
YELLOW	DOWN SWITCH
WHITE	UP SWITCH

Note: The remote switches must connect to a good ground. It is recommended that a ground wire be run from the three switch ground connections to the depth sounder ground connection at the depth sounder.

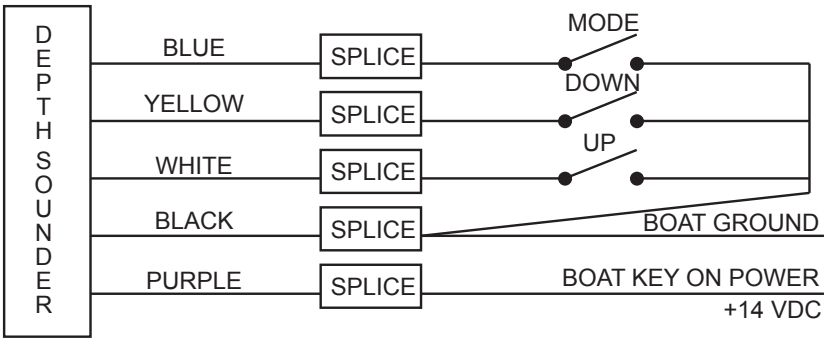

For technical assistance, contact Faria Beede Instruments -
Customer Service between 8:30 AM and 5:30 PM
Eastern time weekdays at (860) 848-9271 or (800) 473-2742.